nexteer AUTOMOTIVE

a leader in intuitive motion control

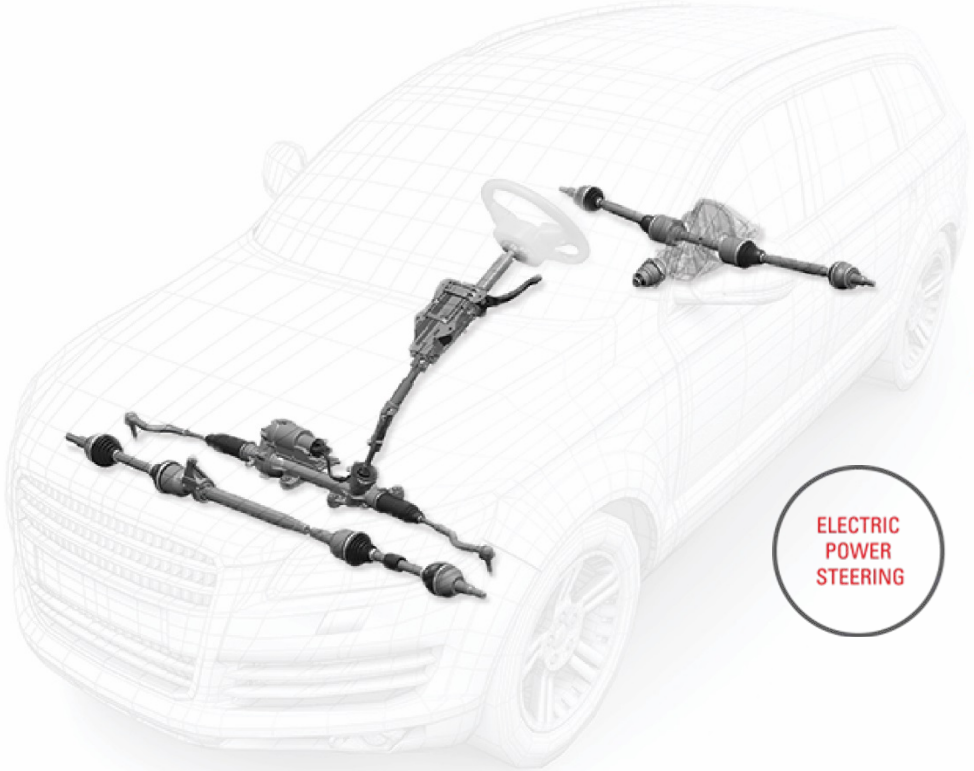

Q3 2020

Investor Communication

15 October 2020

ELECTRIC POWER STEERING

COLUMNS & INTERMEDIATE SHAFTS

DRIVELINE SYSTEMS

HYDRAULIC POWER STEERING

ASSISTED & AUTOMATED DRIVING ENABLERS

Copyright 2020, Nexteer Automotive Corporation. All rights reserved.

Safe Harbor Statement

These materials have been prepared by Nexteer Automotive Group Limited (“Nexteer” or the “Company”) and are being furnished to you solely for informational purposes. The information contained in these materials has not been independently verified. NO REPRESENTATION OR WARRANTY EXPRESS OR IMPLIED IS MADE AS TO, AND NO RELIANCE SHOULD BE PLACED ON, THE FAIRNESS, ACCURACY, COMPLETENESS OR CORRECTNESS OF THE INFORMATION OR OPINIONS CONTAINED HEREIN. It is not the intention to provide, and you may not rely on these materials as providing, a complete or comprehensive analysis of the Company’s financial or trading position or prospects.

Neither Nexteer nor any of its affiliates, advisors or representatives shall have any liability whatsoever (in negligence or otherwise) for any loss that may arise from any use of this presentation or its contents or otherwise arising in connection with this presentation.

Certain statements contained in these materials constitute forward-looking statements. Such forward-looking statements involve known and unknown risks, uncertainties and other factors, many of which are beyond our control, which may cause the actual results, performance or achievements of the Company to be materially different from those expressed by, or implied by the forward-looking statements in these materials. The Company undertakes no obligation to update or revise any forward-looking statement, whether as a result of new information, future events or otherwise. Many factors may cause the actual development to be materially different from the expectations expressed here. Such factors include, for example and without limitation, changes in general economic and business conditions, uncertainties posed by the COVID-19 pandemic and the inherent difficulty in predicting its continued and future potential impacts on the global economy and the Company’s financial condition and business operations, including facilities, employees, customers, suppliers and logistics providers, reduced consumer demand, and government actions or restrictions, fluctuations in currency exchange rates or interest rates, the introduction of competing products, the lack of acceptance for new products or services and changes in business strategy.

In this document, all references to “Booked Business Amount” are to our estimation of the value of all booked business under contracts that have been awarded to us. The Booked Business Amount is based on estimated lifetime volume of the programs derived from indicative production arrangements provided by the applicable OEM customers and information provided by third-party industry sources. In calculating the Booked Business Amount, we also assume that the relevant contracts will be performed in accordance with their terms. Any modification or suspension of the contracts related to the booked business by our customers could have a material and adverse effect on the value of the booked business. The value of booked business is not a measure defined by International Financial Reporting Standards (“IFRS”), and our methodology for determining the Booked Business Amount may not be comparable to the methodology used by comparable companies in determining the value of their booked business. While we believe that our current Booked Business Amount is a relevant financial metric, the information in relation to the booked business and the Booked Business Amount included in this document does not constitute a projection, forecast or prediction of our profits, and the actual contract value may be different from the estimated Booked Business Amount due to various factors and uncertainties beyond our control. We cannot assure you that our estimated Booked Business Amount contained in this document will be indicative of our future operating results.

This document does not constitute an offer, solicitation, invitation, or recommendation to purchase or subscribe for any securities and no part of it shall form the basis of or be relied upon in connection with any contract, commitment or investment decision in relation thereto.

Presenters

BILL QUIGLEY

Senior Vice President
Chief Financial Officer

ROBIN MILAVEC

Executive Board Director
Senior Vice President
Chief Technology Officer
Chief Strategy Officer

Q3 2020 Business Update

Securing Sustainable Profitable Growth

Core Operating Tenets

- **Continued Cost Control and Cash Flow Management**
- **Flawless Customer Program Launches**
- **Leverage In-house Competencies for Portfolio Expansion**
- **Continued Forging Manufacturing Excellence**
  - *2020 Manufacturing Leadership Awards from National Association of Manufacturers*
- **Drive Financial Metrics in Recovering Production Environment**

Q3 2020 Operating Environment
"Green Shoots"

- **People & safety first** remains top priority
- **Strong customer demand** post restart of operations across global footprint
- **Close coordination with suppliers** to maintain flow of components
- **Cost / cash flow management** focus and execution

Q3 Operational Environment

Light Vehicle Unit Production Comparison – September IHS Forecast *(in millions)*

N. America

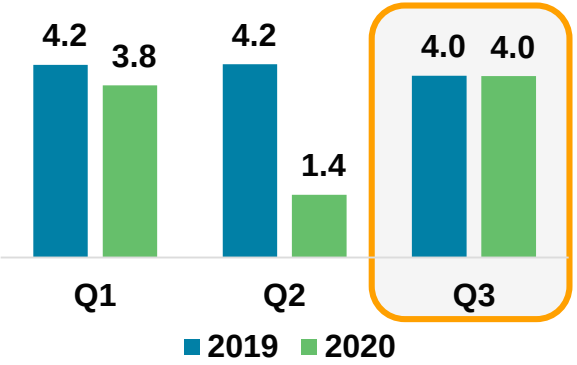

	Y-o-Y	Seq
Q1	-11%	
Q2	-68%	-64%
1H	-39%	
Q3	0%	190%

APAC

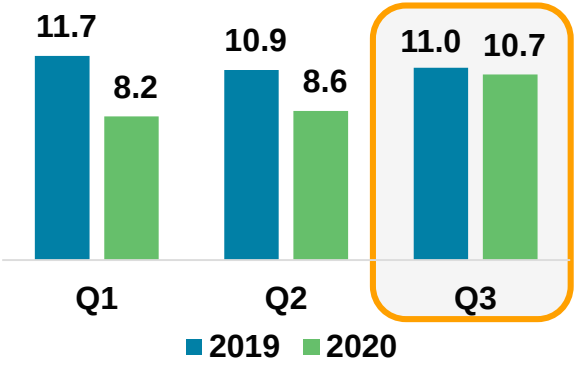

	Y-o-Y	Seq
Q1	-30%	
Q2	-22%	4%
1H	-26%	
Q3	-3%	24%

EMEASA

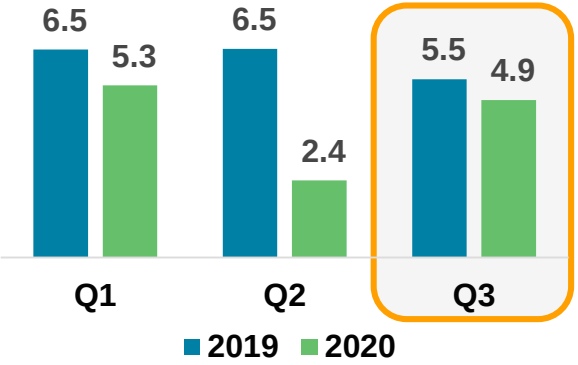

	Y-o-Y	Seq
Q1	-17%	
Q2	-63%	-55%
1H	-40%	
Q3	-12%	104%

2H 2020 Operating Environment
"Green Shoots"

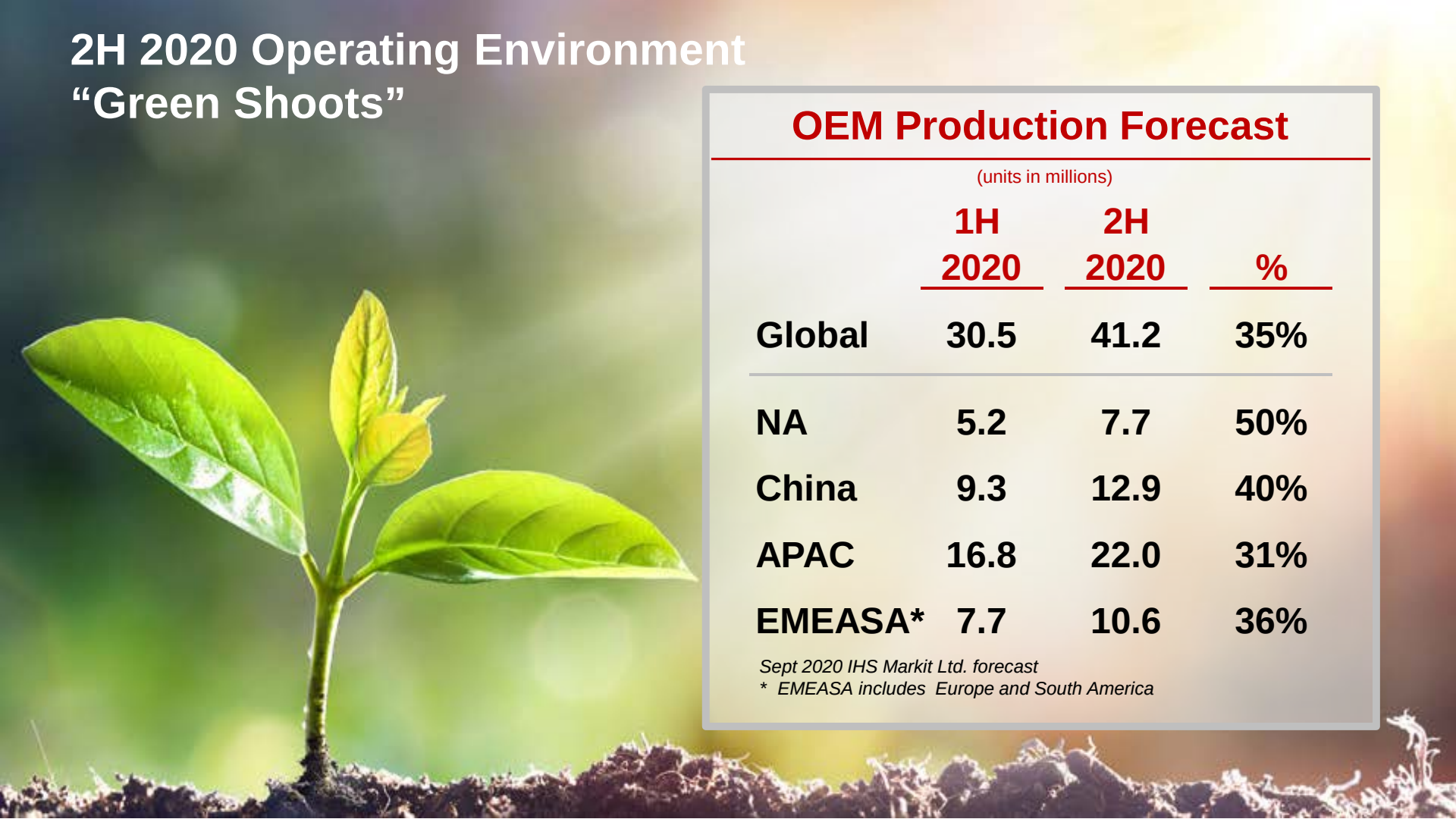

OEM Production Forecast

(units in millions)

	1H 2020	2H 2020	%
Global	30.5	41.2	35%
NA	5.2	7.7	50%
China	9.3	12.9	40%
APAC	16.8	22.0	31%
EMEASA*	7.7	10.6	36%

Sept 2020 IHS Markit Ltd. forecast
** EMEASA includes Europe and South America*

2H 2020 Expectations

1H 2020 Performance vs Market

Y-o-Y Revenue Change

N. America	-38%
Asia Pac.	-24%
EMEASA	-26%

Growth-Over-Market**

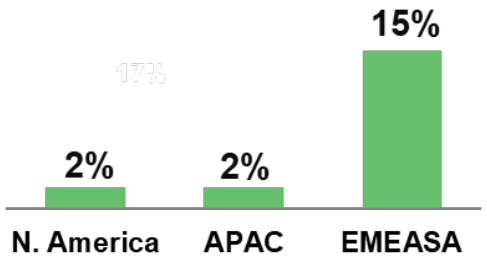

** according to IHS Markit Ltd. July 2020 forecast

- **OEM Production Recovery Progressing** ***(Sept IHS Forecast)***
  - *Across All Markets Served*
- **Favorable Earnings and Cash Flow Conversion on Increased Volume**
- **Cash Management and Discipline Top Priority**

Improving Demand Driving Sequential Financial Improvement

Successful Launch of 14 New Customer Programs in Q3

NORTH AMERICA (2)

Ford F-150 / F-150 Super Crew
REPS, Column

EMEASA (3)

Fiat 500 EV
CEPS, Halfshafts

Dacia Sandero & Logan
Halfshafts

APAC (9)

Chevrolet Blazer
REPS, Halfshafts

GAC Aion V
CEPS

Chery Exceed VX
Halfshafts

Baojun RS-7
CEPS

Chevrolet Bolt
Halfshafts

Buick Envision
Halfshafts

Buick Velite 7
CEPS, Halfshafts

Incumbent business | New business

Business Expansion – Technology Leadership
Stowable Column

- **First to Market**, Nexteer Commitment to Bring Stowable Steering Columns to Production by mid-2023
- **Leverages Nexteer's Building Blocks** from Market-Leading Power Adjustable Steering Column Technology
- **Innovative Solutions** for Crash Safety and Steering Wheel, Steering Column Positioning.
- **Enables** OEMs to Create **a New Vehicle Environment**
- **Complementing Technology** for Vehicles Featuring **Steering by Wire and Autonomous Driving** Modes

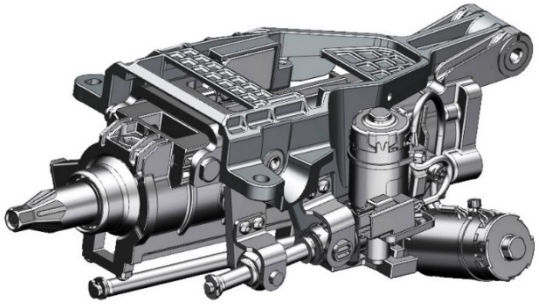

Stowed

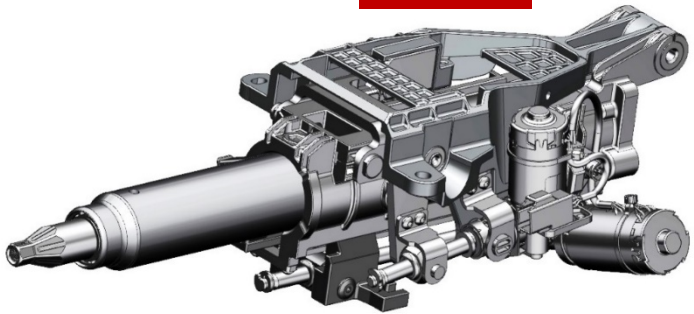

Un-stowed

Stow Distances Understudy:
*100 mm, **150 mm**, 200 mm, 250 mm*

Business Expansion – Technology Leadership

Brake-to-Steer

CNXMOTION

Brake-to-Steer Benefits
for ADAS/AD Levels 4/5

Enhancing the steering "safety net" in highly automated driving

Uses electronic braking as **additional layer of steering control**

Performs steering **dependent & independent of driver**

Offers **cost-effective** approach to advanced safety

Supports EPS or SbW vehicles **with or without steering wheel**

Can be adapted to assist a driver in **ADAS/AD Levels 1 – 3**

nexteer AUTOMOTIVE

Business Expansion – Technology Leadership

Brake-to-Steer

Brakes Steer Vehicle While Controlling Speed

- **Resides in the Motion Control System**
- **Connects vehicle's path planner & actuators to determine the best path forward**
- **Three possible engagement scenarios:**
  1. ***Continues on intended path before ultimately moving to the next two options***
  2. ***Slows & brakes to steer the vehicle to the side of the road***
  3. ***Stops in the lane***

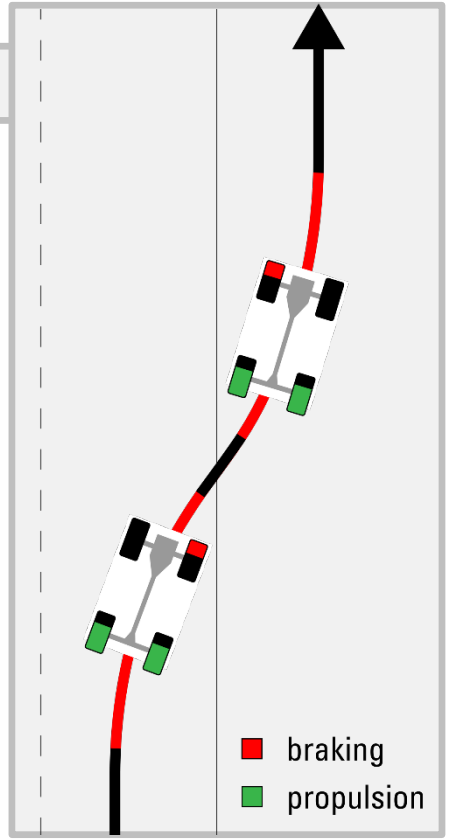

nexteer AUTOMOTIVE

10 YEARS

CELEBRATING A HISTORY OF EXCELLENCE

Strategy for Profitable Growth

- Expand & Diversify Revenue Base
- Strengthen Technology Leadership
- Capitalize on EPS as Enabler for ADAS
- Optimize Cost Structure
- Pursue Select Acquisitions & Alliances
- Target China & Emerging Markets

A Well-defined Plan To Drive Stakeholder Value

nexteer AUTOMOTIVE

10 YEARS

CELEBRATING A HISTORY OF EXCELLENCE

	ADAS L2/3 *Advanced Safety, Driver Assist*	Electrification	Software	ADAS L4/5 *Advanced Safety, High/Full Automation*	MaaS	Connectivity
Driveline		✓			✓	
Columns & I-Shafts	✓	✓	✓	✓		
Electric Power Steering	✓	✓	✓	✓	✓	✓
Steer-by-Wire	✓	✓	✓	✓	✓	✓
R&D	✓	✓	✓	✓	✓	✓
CNXMotion JV	✓	✓	✓	✓	✓	✓

Road Map for the Next 10 Years!

nexteer AUTOMOTIVE